Torget
+7 (911) 858-31-53
info@torget.ru

TOPP

Windows Automation - 2014 Catalogue

tecnologie del movimento

Torget
+7 (911) 858-31-53
info@torget.ru

TOPP

tecnologie del movimento

TOPP spa
Our commitment is to bring you the benefits of a smooth and clean experience with windows and doors automation.

Our key values are:

- **Expertise in innovation;**
- **Proved quality;**
- **Long term customer orientation.**

Expertise in innovation
We started from the very beginning, back in 1996, by offering our engineering know-how as a service bureau and our focus has always been the product innovation. The use of state-of-the-art 3D engineering tools and the aid of laser sintering systems for rapid prototyping accelerates the process of study and industrialization of the products and has brought Topp to the registration of over 50 international patents.

Proved quality
Proven quality means: state of the art raw materials, technical know-how, full production process monitoring and the availability of a well-organized and efficient testing laboratory. After being produced, each device is tested individually in order to fulfill our commitment to quality. Your satisfaction is our success.

Long term customer orientation
Customer orientation means keeping full focus on the market needs: observing, feeling and listening to the customer requirements. Cooperation starts, from the preselling activity, suggesting the most recommended product for the applications required and grows up to the post selling stage when an immediate and efficient reaction is required on the field. To achieve this goal, since the very beginning, our major effort has been building long term relationships with sales partners all over the world.

Our ability to find the correct balance between design, functionality, technology and creativity builds what is known all over the world as "**Made in Italy**".

The success of TOPP is the conquest of an increasingly varied and demanding market that exalts, involves and stimulates the development of innovative ideas that become state-of-the-art Italian products.

Torget
+7 (911) 858-31-53
info@torget.ru

C20	Chain actuator – Thrust force 300N – Max stroke 360 mm	04
C30	Chain actuator – Thrust force 300N – Max stroke 380 mm	06
C40	Chain actuator – Thrust force 400N – Max stroke 500 mm	08
ACK4	Chain actuator – Thrust force 300N – Max stroke 400 mm	10
C130	Chain actuator – Thrust force 300N – Max stroke 360 mm	12
C240	Dual push points chain actuator – Thrust force 400N – Max stroke 360 mm	14
SL60	Linear stem actuator – Thrust force 600N – Max stroke 750 mm	16
T50	Rack actuator – Thrust force 500N – Max stroke 750 mm	18
T80	Rack actuator – Thrust force 800N – Max stroke 1000 mm	20
TF23R_TF33R_TF24R_TF44R_RR	Control and power units for actuator at 24V/230V	22
RW_RD_RF911_RF913_TR8	Detectors	24
TECHNICAL REMARKS	How to choose the right actuator	26

Torget
+7 (911) 858-31-53
info@torget.ru

C20

Chain actuator
Thrust force 300N
Max stroke 360mm

Description for technical specifications

Electric actuator TOPP, model C20 with double link articulated chain, contained in a suitable casing, complete with support and fitting accessories for top and bottom hung windows. Operation at 230V 50Hz or, as an alternative, at 24V DC. Maximum applicable load 300N. Rapid hooking system for the adjustment to the frame. Stroke adjustable at 240 or 360 mm by an external selector. CE marked device.

Technical characteristics	C20 230V	C20 24V
Power supply voltage	230V ~ 50Hz	min. 21V - max 28V
Max rcommended load in thrust	300N	
Max rcommended load in traction	200N	
Stroke	240 and 360 mm	
Absorbed current	0,12A	0,43A
Idle translation speed	8mm/sec	7,5mm/sec
Duration of the idle stroke	46 sec	48 sec
Double electrical insulation	YES	-
Service type	S2 of 4 min	
Operating temperature	-5° +50° C	
Protection degree of electric devices	IP30	
Stroke end regulation in closing	not necessary	
Parallel connection of two or more C20	YES	
Stroke end	electronic in opening, by amperometric absorption in closing	
Dimensions	362x48x34 mm	
Weight*	0,970 kg	0,940 kg

* The weight indicated in this price list may vary according to the chosen accessories

Applications: bottom and top hung windows, domes, skylights.

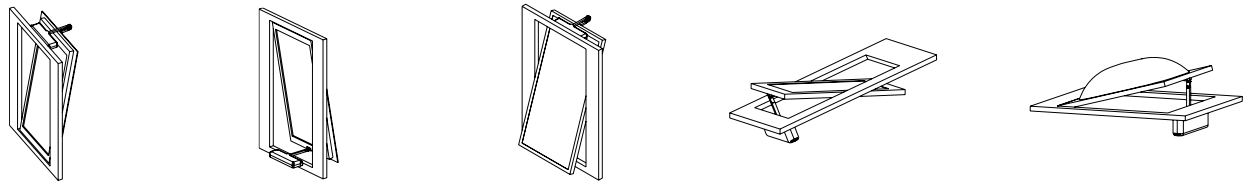

Torget
+7 (911) 858-31-53
info@torget.ru

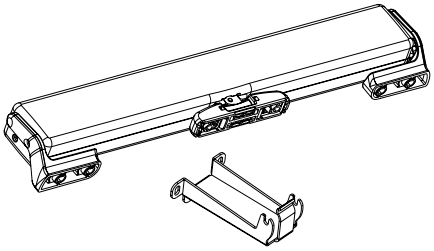

P/N	description

C20 standard 1 push point

3A3#	C20 chain actuator 230V black
3A3#	C20 chain actuator 230V grey
3A3#	C20 chain actuator 230V white
3A3#	C20 chain actuator 24V black
3A3#	C20 chain actuator 24V grey
3A3#	C20 chain actuator 24V white

C20 Tandem standard 2 push points - Stroke 36cm

3A7#	Kit C20 chain actuator - tandem version - 230V black
3A7#	Kit C20 chain actuator - tandem version - 230V grey
3A7#	Kit C20 chain actuator - tandem version - 230V white
3A7#	Kit C20 chain actuator - tandem version - 24V black
3A7#	Kit C20 chain actuator - tandem version - 24V grey
3A7#	Kit C20 chain actuator - tandem version - 24V white

Min. inter axis between the 2 actuators: 1000mm

Description of the standard pattern for 1 push point

3A3#	C20 chain actuator 230V 1,5mt lead Frontal swivel brackets set for top/bottom hung windows Upper bracket for bottom hung windows ARS Rapid hooking device to the frame Spare parts

Description of the standard pattern for 2 push points - 230V - 36 cm stroke

3A7#	C20 chain actuator 24V (2 pcs) 6mt lead AL2/SW 230V to 24V transformer unit Frontal swivel brackets set for top/bottom hung windows (2 pcs) Upper bracket for bottom hung windows (2 pcs) ARS Rapid hooking device to the frame (2 pcs) Spare parts (2 pcs)

Accessories and spare parts

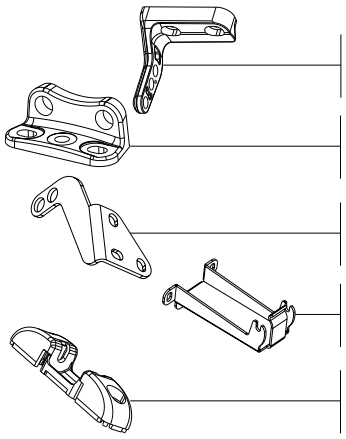

3A3200	Frontal swivel brackets set for top/bottom hung windows - black
3A3202	Frontal swivel brackets set for top/bottom hung windows - grey
3A3201	Frontal swivel brackets set for top/bottom hung windows - white
3A3210	Swivel brackets set for vertical mounting - black
3A3212	Swivel brackets set for vertical mounting - grey
3A3211	Swivel brackets set for vertical mounting - white
3A3501	Brackets set for installation on the moving part of the window - black
3A3503	Brackets set for installation on the moving part of the window - grey
3A3502	Brackets set for installation on the moving part of the window - white
1A3640	Upper bracket for bottom hung windows - black
1A3642	Upper bracket for bottom hung windows - grey
1A3641	Upper bracket for bottom hung windows - white
1UA001	ARS Rapid hooking device to the frame - black
1UA003	ARS Rapid hooking device to the frame - grey
1UA002	ARS Rapid hooking device to the frame - white
3A3000	Standard spare parts

Special stroke < 36cm for C20
Special stroke < 36cm for C20 Tandem

Additional cost for special stroke
or order quantities below 12pcs

Torget
+7 (911) 858-31-53
info@torget.ru

C30

Chain actuator
Thrust force 300N
Max stroke 380mm

Description for technical specifications

Electric actuator TOPP, model C30 with double link articulated chain, contained in a suitable casing, complete with support and fitting accessories for top and bottom hung windows. Operation at 230V 50Hz or, as an alternative, at 24V DC. Maximum applicable load 300N. Rapid hooking system for the adjustment to the frame. Stroke adjustable at 200 or 380 mm by an external selector. Electronics with acoustic device that warns of any incorrect installations. On request, preset version for the USA2 synchronisation unit available for the simultaneous running of 2 actuators on the same window. CE marked device.

Technical characteristics	C30 230V		C30 24V
Power supply voltage	230V ~ 50Hz		24V
Maximum applicable load in thrust		300N	
Maximum applicable load in traction		300N	
Strokes		200 and 380 mm	
Absorbed current	0,26A		1,3A
Idle translation speed	27mm/sec		17mm/sec
Duration of the idle stroke	14 sec		22 sec
Double electrical insulation	YES		-
Service Type		S2 of 4 min	
Operating temperature		-5° + 50° C	
Protection degree of electrical devices		IP30	
Adjustment of the window frame connection		15 mm	
Adjustment of pins for the swivel brackets		15 mm	
Parallel connection of two or more C30		YES	
Connection and synchronization of two C30 on the same window*		with control unit USA2 only	
Chain position control		YES	
Stroke end		encoder	
Electronics with acoustic device to warn the user of wrong installation (buzzer)		YES	
Dimensions		337,2x80x49 mm	
Weight**		1,1 kg	

* Min. distance between the actuators: 1500 mm
** The weight indicated in this price list may vary according to the chosen accessories

Applications: Bottom and top hung windows, domes, skylights.

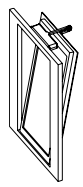
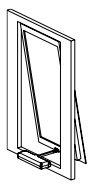
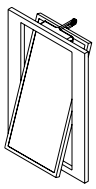
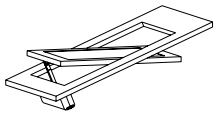
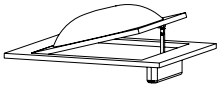

Torget
+7 (911) 858-31-53
info@torget.ru

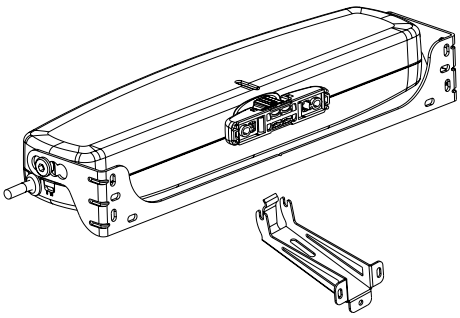

P/N	description
C30 standard 1 push point	
3A4#	C30 chain actuator 230V black
3A4#	C30 chain actuator 230V grey
3A4#	C30 chain actuator 230V white
3A4#	C30 chain actuator 24V black
3A4#	C30 chain actuator 24V grey
3A4#	C30 chain actuator 24V white
C30 standard 2 push points	
3A4#	KIT USA2 C30 230V Synchronisation unit - 2 push points - black
3A4#	KIT USA2 C30 230V Synchronisation unit - 2 push points - grey
3A4#	KIT USA2 C30 230V Synchronisation unit - 2 push points - white
3A4#	KIT USA2 C30 24V Synchronisation unit - 2 push points - black
3A4#	KIT USA2 C30 24V Synchronisation unit - 2 push points - grey
3A4#	KIT USA2 C30 24V Synchronisation unit - 2 push points - white

Description of the standard pattern for 1 push point

3A4#
C30 chain actuator 230V (spare parts included)
Swivel frontal bracket for top/bottom hung windows
Upper bracket for bottom hung windows
ARS Rapid hooking device to the frame

Description of the standard pattern for 2 push points

3A4#
C30 chain actuator 230V - black
(preset for USA2 synchronization unit, without brackets)
C30 chain actuator 230V - black
(preset for USA2 synchronization unit, without brackets)
USA2 C30 230V Synchronisation unit - 2 push points
Swivel frontal bracket for top/bottom hung windows (2 pcs)
Upper bracket for bottom hung windows (2 pcs)
ARS Rapid hooking device to the frame (2 pcs)

Accessories and spare parts

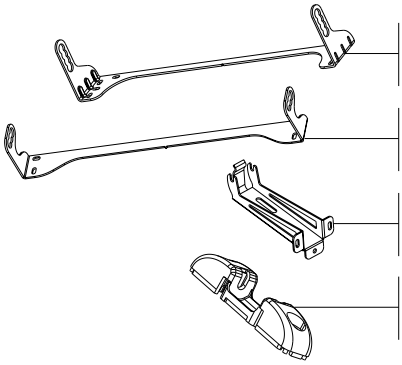

1A4810	Swivel frontal bracket for top/bottom hung windows - black
1A4812	Swivel frontal bracket for top/bottom hung windows - grey
1A4811	Swivel frontal bracket for top/bottom hung windows - white
1A4815	Swivel brackets set for vertical mounting - black
1A4817	Swivel brackets set for vertical mounting - grey
1A4816	Swivel brackets set for vertical mounting - white
1A4615	Upper bracket for bottom hung windows - black
1A4617	Upper bracket for bottom hung windows- grey
1A4616	Upper bracket for bottom hung windows - white
1UA001	ARS Rapid hooking device to the frame - black
1UA003	ARS Rapid hooking device to the frame - grey
1UA002	ARS Rapid hooking device to the frame - white

Torget
+7 (911) 858-31-53
info@torget.ru

C40

Chain actuator
Thrust force 400N
Adjustable stroke max. 500mm

Description for technical specifications

Electric actuator TOPP, model C40 with double link articulated chain, contained in a suitable casing, complete with support and fitting accessories for top and bottom hung windows. Operation at 230V 50Hz or, as an alternative, at 24V DC. Maximum applicable load 400N. Rapid hooking system for the adjustment to the frame. Max. stroke 500 mm, adjustable at 100, 150, 200, 250, 300, 400, 500 mm by an external handgrip. Stroke-end through current consumption in closing. Safety device to reduce the traction force in the last 10 cm of the stroke. Protection degree level IP 55. On request, preset version for the USA2 synchronisation unit available for the simultaneous running of 2 actuators on the same window. CE marked device.

Technical characteristics	C40 230V	C40 24V
Power supply voltage	230V ~ 50Hz	24V
Maximum applicable load in thrust	400N	
Maximum applicable load in traction	400N	
Strokes	100 -150 - 200 - 250 - 300 - 400 - 500 mm	
Absorbed current	0,24A	1,1A
Idle translation speed	18,5mm/sec	10,5mm/sec
Duration of the idle stroke	27sec	48 sec
Double electrical insulation	YES	-
Service Type	S2 of 5min	S2 of 8min
Operating temperature	-5° +50° C	
Protection degree of electrical devices	IP55	
Adjustment of the window frame hooking system	not necessary	
Parallel connection of two or more C40	YES	
Connection and synchronization of two C40 on the same window*	with control unit USA2 only	
Chain position control	YES	
Stroke end	electronic in opening, by amperometric absorption in closing	
Electronics with acoustic device to warn the user of wrong installation (buzzer)	YES	
Dimensions	387,6x95x50 mm	
Weight**	1,9 kg	

* Min. distance between the actuators: 1500 mm
** The weight indicated in this price list may vary according to the chosen accessories

Applications: bottom and top hung windows, domes, skylights.

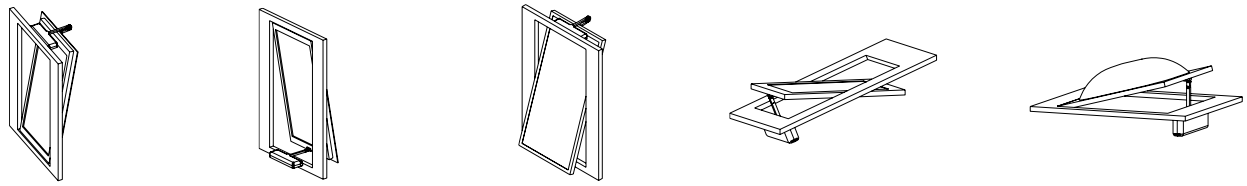

Torget
+7 (911) 858-31-53
info@torget.ru

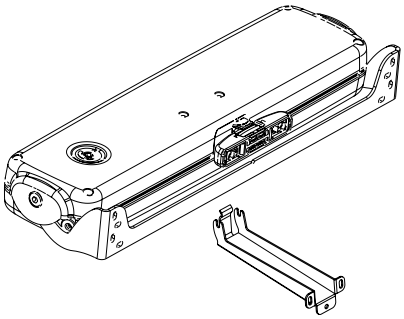

P/N	description

C40 standard 1 push point

3A2#	C40 chain actuator 230V black
3A2#	C40 chain actuator 230V grey
3A2#	C40 chain actuator 230V white
3A2#	C40 chain actuator 24V black
3A2#	C40 chain actuator 24V grey
3A2#	C40 chain actuator 24V white

C40 standard 2 push points

3A2#	KIT USA2 C40 230V Synchronisation unit - 2 push points - black
3A2#	KIT USA2 C40 230V Synchronisation unit - 2 push points - grey
3A2#	KIT USA2 C40 230V Synchronisation unit - 2 push points - white
3A2#	KIT USA2 C40 24V Synchronisation unit - 2 push points - black
3A2#	KIT USA2 C40 24V Synchronisation unit - 2 push points - grey
3A2#	KIT USA2 C40 24V Synchronisation unit - 2 push points - white

Description of the standard pattern for 1 push point

3A2#	C40 chain actuator 230V (spare parts included) Swivel frontal bracket for top/bottom hung windows Upper bracket for bottom hung windows ARS Rapid hooking device to the frame

Description of the standard pattern for 2 push points

3A2#	C40 chain actuator 230V - black (preset for USA2 synchronization unit, without brackets) C40 chain actuator 230V - black (preset for USA2 synchronization unit, without brackets) USA2 Synchronisation unit - 2 push points Swivel frontal bracket for top/bottom hung windows (2 pcs) Upper bracket for bottom hung windows (2 pcs) ARS Rapid hooking device to the frame (2 pcs)

Accessories and spare parts

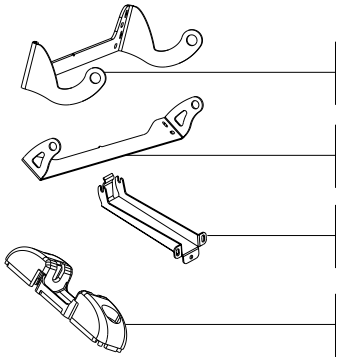

1A2600	Swivel frontal bracket for top/bottom hung windows - black
1A2602	Swivel frontal bracket for top/bottom hung windows - grey
1A2601	Swivel frontal bracket for top/bottom hung windows - white
1A2610	Swivel bracket for vertical mounting - black
1A2612	Swivel bracket for vertical mounting - grey
1A2611	Swivel bracket for vertical mounting - white
1A2620	Upper bracket for bottom hung windows - black
1A2622	Upper bracket for bottom hung windows- grey
1A2621	Upper bracket for bottom hung windows - white
1UA001	ARS Rapid hooking device to the frame - black
1UA003	ARS Rapid hooking device to the frame - grey
1UA002	ARS Rapid hooking device to the frame - white

Torget
+7 (911) 858-31-53
info@torget.ru

ACK4

Chain actuator
Thrust force 300N
Adjustable stroke max. 400mm

Description for technical specifications

Electric actuator Topp model ACK4 with double-link made of STAINLEES steel, contained in as die-cast body of alluminum alloy coated by epoxy powders, complete with support and fitting accessories for top and bottom hung windows. Operation at 230V 50Hz, as an alternative, at 24V DC. Max. traction and thrust force 300N. Max. stroke 40cm, adjustable at 100, 150, 200, 205, 300, 350, 400 mm by an external handgrip. Electronics with acoustic device that warns of any eventual incorrect installations. On request, preset version for the USA2 synchronisation unit available for the simoultaneousing running of 2 actuators on the same window. Protection degree of electric devices IP55. CE marked device, complying with the EN12101-2 standard for smoke and heat evacuation systems (only 24V version).

Technical characteristics	ACK4 230 V	ACK4 24 V
Power supply voltage	230V ~ 50Hz	24V
Maximum applicable load in thrust	300N	
Maximum applicable load in traction	300N	
Strokes	100 - 150 - 200 - 250 - 300 - 350 - 400 mm	
Absorbed current	0,32A	1,35A
Idle translation speed	27mm/sec	17mm/sec
Duration of the idle stroke	15 sec	23 sec
Double electrical insulation	YES	-
Service Type	S2 of 2 min	S2 of 3 min
Operating temperature	-5° +50° C	
Protection degree of electrical devices	IP55	
Stroke end adjustment to the window frame (in closing)	10 mm	
Parallel connection of two or more ACK4	YES	
Connection and synchronization of 2 ACK4 on the same window*	with USA2 synchronisation unit only	
Chain position control	YES	
Stroke end	encoder	
Acoustic device that warns of any eventual incorrect installations (buzzer)	YES	
Dimensions	288,5x83x47,8 mm	
Weight**	1,9 kg	

* Min. distance between the actuators: 1500 mm
** The weight indicated in this price list may vary according to the chosen accessories

Applications: bottom and top hung windows, domes, skylights.

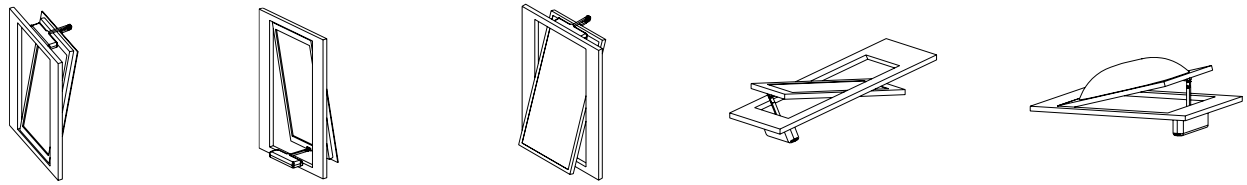

Torget
+7 (911) 858-31-53
info@torget.ru

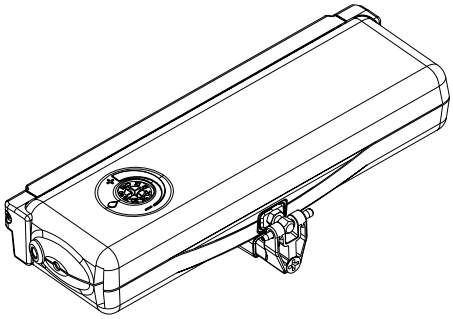

P/N	description

ACK4 standard 1 push point

3A1#	ACK4 chain actuator 230V black RAL 9005
3A1#	ACK4 chain actuator 230V grey RAL 9006
3A1#	ACK4 chain actuator 230V white RAL 9010
3A1#	ACK4 chain actuator 24V black RAL 9005
3A1#	ACK4 chain actuator 24V grey RAL 9006
3A1#	ACK4 chain actuator 24V white RAL 9010

ACK4 RWA version 1 push point (without upper bracket for bottom hung windows)

3A11#	ACK4 chain actuator 24V RWA version black RAL 9005 (supplied with 3m silicon cable)
3A11#	ACK4 chain actuator 24V RWA version grey RAL 9006 (supplied with 3m silicon cable)
3A11#	ACK4 chain actuator 24V RWA version white RAL9010 (supplied with 3m silicon cable)

ACK4 standard 2 push points

3A1#	KIT USA2 ACK 230V Synchronisation unit - 2 push points - black
3A1#	KIT USA2 ACK 230V Synchronisation unit - 2 push points - grey
3A1#	KIT USA2 ACK 230V Synchronisation unit - 2 push points - white
3A1#	KIT USA2 ACK 24V Synchronisation unit - 2 push points - black
3A1#	KIT USA2 ACK 24V Synchronisation unit - 2 push points - grey
3A1#	KIT USA2 ACK 24V Synchronisation unit - 2 push points - white

Description of the standard pattern for 1 push point

3A1#	ACK4 chain actuator 230V Frontal bracket for top/bottom hung windows Upper bracket for bottom hung windows Hooking device to the frame and spare parts

Description of the standard pattern for 2 push points
(preset for USA2 synchronization unit, without brackets)

3A1#	ACK4 chain actuator 230V - black ACK4 chain actuator 230V - black USA2 Synchronisation unit - 2 push points Frontal bracket for top/bottom hung windows (2 pcs) Upper bracket for bottom hung windows (2 pcs) Hooking device to the frame and spare parts

Accessories and spare parts

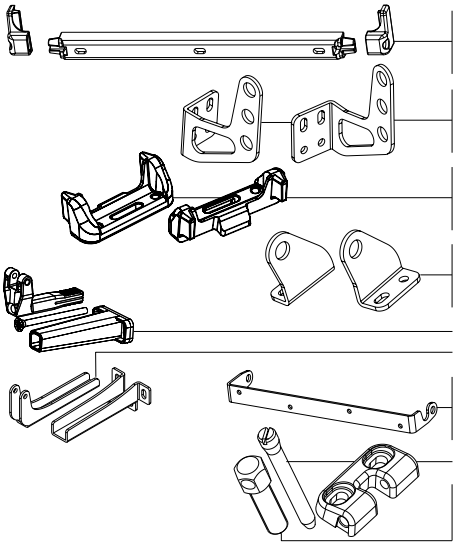

3A1360	Frontal bracket for top/bottom hung windows - black
3A1362	Frontal bracket for top/bottom hung windows - silver
3A1361	Frontal bracket for top/bottom hung windows - white
3A1391	Large swivel brackets set frontal mounting - black
3A1393	Large swivel brackets set frontal mounting - silver
3A1392	Large swivel brackets set frontal mounting - white
3A1380	Fixed vertical mounting brackets set - black
3A1382	Fixed vertical mounting brackets set - silver
3A1381	Fixed vertical mounting brackets set - white
3A1396	Small vertical mounting brackets set - black
3A1398	Small vertical mounting brackets set - silver
3A1397	Small vertical mounting brackets set - white
3A1355	Upper bracket for bottom hung windows - black
3A1356	Upper bracket for bottom hung windows (RWA version) - black
3A1375	Single swivel bracket for bottom hung windows - black
3A1377	Single swivel bracket for bottom hung windows - silver
3A1376	Single swivel bracket for bottom hung windows - white
3A1001	Hooking device to the frame with pin and spare parts
0B0005	Extension pin h 37,5 (overlapped part 10-20mm)
0B0007	Extension pin h 47,5 (overlapped part 20-30mm)
0B0006	Extension pin h 57,5 (overlapped part 30-40mm)

Special lead max. 6mt long

Torget
+7 (911) 858-31-53
info@torget.ru

C130

Chain actuator
Thrust force 300N
Max stroke 360mm

Description for technical specifications

Electric actuator Topp model C130 with double-link chain, in an elegant die-cast aluminium profile, with custom-made length from 60 cm to 120 cm, complete with brackets and accessories for top and bottom hung windows. Operation at 230V ~ 50Hz or, as an alternative, at 24V d.c. Max. thrust force 300N. Fast hooking and unhooking system to the window frame. Max. stroke 36 cm. CE marked device.

Technical characteristics	C130 230 V	C130 24 V
Power supply voltage	230V ~ 50Hz	min. 21V - max 28V
Max rcommended load in thrust	300N	
Max rcommended load in traction	200N	
Stroke	up to 360 mm	
Absorbed current	0,12A	0,43A
Idle translation speed	8 mm/sec	
Duration of the idle stroke	46 sec	48 sec
Double electrical insulation	YES	-
Service type	S2 of 4 min	
Operating temperature	- 5° + 50° C	
Protection degree of electric devices	IP30	
Stroke end regulation in closure	not necessary	
Connection of two or more actuators in parallel	YES	
Stroke end	electronic in opening, by amperometric absorption in closing	

Applications: bottom and top hung windows, domes, skylights.

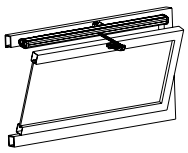

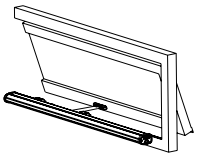

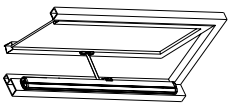

Torget
+7 (911) 858-31-53
info@torget.ru

P/N	description

C130 chain actuator (profile's length: 60 cm - 90 cm), stroke 36cm, application on top hung windows

3A6#000002015	C130 chain actuator 230V
3A6#000002062	C130 chain actuator 24V

C130 chain actuator (profile's length: 91 cm - 120 cm), stroke 36cm, application on top hung windows

3A6#000002063	C130 chain actuator 230V
3A6#000002064	C130 chain actuator 24V

C130 chain actuator with on-board receiver, stroke 36cm, application on top hung windows

3A6#000002065	C130 chain actuator 230V RR (profile's length: 60 cm - 90 cm)
3A6#000002066	C130 chain actuator 230V RR (profile's length: 91 cm - 120 cm)

Description of the standard pattern, profile 60 cm - 90 cm, application on top hung windows

3A6#000002015 C130 chain actuator 230V
Frontal bracket for top hung windows (2 pcs)
Clamps set for top hung brackets (2 pcs)
ARS fast hooking device to the frame

Additional services

Additional cost for profile painting in standard RAL finishes
(colour availability to be checked)
Min. quantity: 12 pcs.
Additional cost for special strokes
for order quantities below 12 pcs

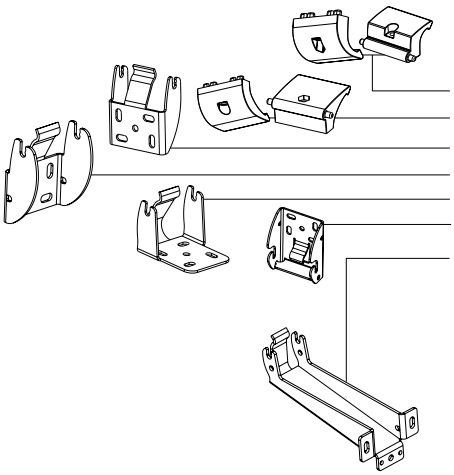

Accessories and spare parts

3A5005	Clamps for top hung windows (zinc-plated)
3A5006	Clamps for bottom hung windows (zinc-plated)
1A5822	Slim frontal bracket for top hung windows (zinc-plated)
1A5827	Frontal bracket for top hung windows (zinc-plated)
1A5823	Bracket for vertical mounting (zinc-plated)
1A5829	C240 Bracket for top hung reversed assembly (zinc-plated)
1A5828	Fallback bracket for bottom hung windows (zinc-plated)
1UA003	ARS Rapid hooking device to the frame - grey

Special stroke < 36cm

Additional cost for special strokes
for order quantities below 12 pcs.

Torget
+7 (911) 858-31-53
info@torget.ru

C240

Dual push points chain actuator
Thrust force 400N
Max stroke 360mm

Description for technical specifications

Electric actuator Topp model C240 with 2 double-link chains, in an elegant die-cast aluminium profile, with custom-made length from 100cm to 400cm, complete with brackets and accessories for top and bottom hung windows. Operation at 230V~50Hz or, as an alternative, at 24V DC. Max. thrust force 400N. Fast hooking and unhooking system to the window frame. Max. stroke 36 cm. CE marked.

Technical characteristics	C240 230 V		C240 24 V
Power supply voltage	230V ~ 50Hz		min. 21V - max 28V
Max rcommended load in thrust		400N	
Max rcommended load in traction		300N	
Stroke		up to 360 mm	
Absorbed current	0,22A		0,75A
Idle translation speed	8 mm/sec		7,5 mm/sec
Duration of the idle stroke	46 sec		48 sec
Double electrical insulation	YES		-
Service type		S2 of 4 min	
Operating temperature		- 5° + 50° C	
Protection degree of electric devices		IP30	
Stroke end regulation in closure		not necessary	
Connection of two or more actuators in parallel		YES	
Stroke end		electronic in opening, by amperometric absorption in closing	

Applications: bottom and top hung windows, domes, skylights.

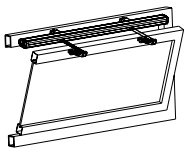

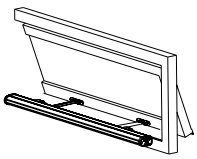

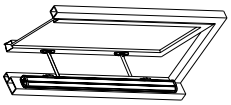

Torget
+7 (911) 858-31-53
info@torget.ru

P/N	description

C240 dual push points actuator
(profile's length: 120 cm - 150 cm),stroke 36cm, application on top hung windows

3A5#000000702 Dual push points actuator C240 230V
3A5#000000792 Dual push points actuator C240 24V

C240 dual push points actuator
(profile's length: 151 cm - 200 cm), stroke 36cm, application on top hung windows

3A5#000000653 Dual push points actuator C240 230V
3A5#000000575 Dual push points actuator C240 24V

C240 dual push points actuator
(profile's length: 201 cm - 250 cm), stroke 36cm, application on top hung windows

3A5#000000793 Dual push points actuator C240 230V
3A5#000000574 Dual push points actuator C240 24V

C240 dual push points actuator
(profile's length: 251 cm - 300 cm), stroke 36cm, application on top hung windows

3A5#000000794 Dual push points actuator C240 230V
3A5#000000573 Dual push points actuator C240 24V

C240 dual push points actuator
(profile's length: 301 cm - 400 cm), stroke 36cm, application on top hung windows

3A5#000000795 Dual push points actuator C240 230V
3A5#000000796 Dual push points actuator C240 24V

Description of the standard pattern,
profile 120 cm - 150 cm, stroke 36cm, application on top hung windows

3A5#000000702 Dual push points actuator C240 230V
Frontal bracket for top hung windows (2 pcs)
Clamps set for top hung brackets (2 pcs)
ARS Fast hooking device to the frame (2 pcs)

Additional services

Special stroke < 36cm
Additional cost for profile painting in standard RAL finishes
(colour availability to be checked)
Min. quantity: 12 pcs
Additional cost for special strokes
for order quantities below 12 pcs

Accessories and spare parts

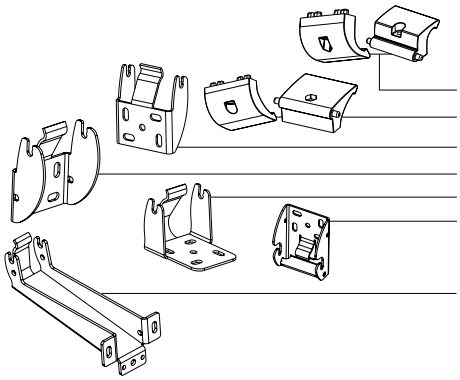

3A5005	Clamps for top hung windows (zinc-plated)
3A5006	Clamps for bottom hung windows (zinc-plated)
1A5822	Slim frontal bracket for top hung windows (zinc-plated)
1A5827	Frontal bracket for top hung windows (zinc-plated)
1A5823	Bracket for vertical mounting (zinc-plated)
1A5829	C240 Bracket for top hung reversed assembly (zinc-plated)
1A5828	Fallback bracket for bottom hung windows (zinc-plated)
1UA003	ARS Rapid hooking device to the frame - grey

Torget
+7 (911) 858-31-53
info@torget.ru

SL60

Linear stem actuator
Thrust force 600N
Max. stroke 750mm

Description for technical specifications

Linear electric actuator Topp model SL60 with self-aligning tilting movement, complete with support and fitting accessory for top hung windows. Operation at 230V 50Hz, or, as an alternative, at 24V DC. Max. traction and thrust force 600N. Preset for the connection in parallel of two or more actuators, with stroke end microswitches. Available strokes: 180 - 230 - 350 - 550 - 750 mm. CE marked device.

Technical characteristics	SL60 230 V	SL60 24 V
Power supply voltage	230V ~ 50Hz	24V DC
Maximum applicable load in thrust	600N	
Maximum applicable load in traction	450N	500N
Stroke	180 - 230 - 350 - 550- 750 mm	
Absorbed current	0,33A	1,5A
Idle translation speed	12mm/sec	7mm/sec
Duration of the idle stroke	(stroke/idle translation speed)	
Double electrical insulation	YES	-
Service Type	S2 of 3 min	
Operating temperature	-5° +50° C	
Protection degree of electrical devices	IP55	
Parallel connection of 2 or more actuators	YES	
Stroke end	micro switch	
Dimensions	from 337 up to 907x47x104 mm	

Applications: top hung windows, domes, louvers and sun blades.

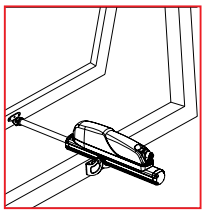
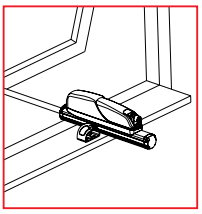
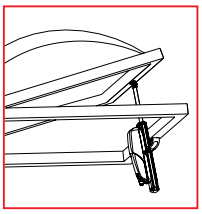
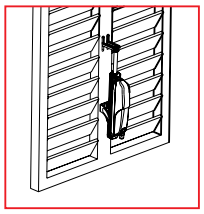
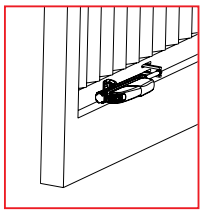

Torget
+7 (911) 858-31-53
info@torget.ru

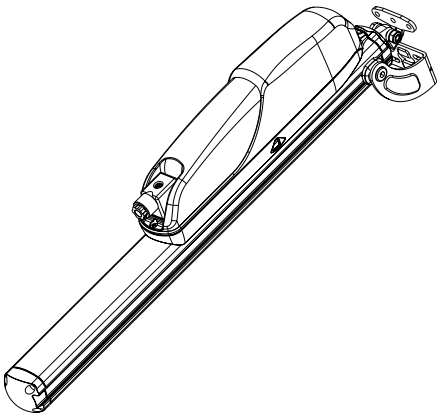

P/N	description
SL60 standard 1 push point	
3B1#	SL60 linear stem actuator 230V stroke 180 mm
3B1#	SL60 linear stem actuator 230V stroke 180 mm (louvers)
3B1#	SL60 linear stem actuator 230V stroke 230 mm
3B1#	SL60 linear stem actuator 230V stroke 350 mm
3B1#	SL60 linear stem actuator 230V stroke 550 mm
3B1#	SL60 linear stem actuator 230V stroke 750 mm
3B1#	SL60 linear stem actuator 24V stroke 180 mm
3B1#	SL60 linear stem actuator 24V stroke 180 mm (louvers)
3B1#	SL60 linear stem actuator 24V stroke 230 mm
3B1#	SL60 linear stem actuator 24V stroke 350 mm
3B1#	SL60 linear stem actuator 24V stroke 550 mm
3B1#	SL60 linear stem actuator 24V stroke 750 mm
Description of the standard pattern	
3B1#	SL60 linear stem actuator 230V stroke 350 mm
	Actuator supporting bracket
	Fitting bracket to the frame
	Spare parts
Accessories and spare parts	
2B1001	SL60 230V 600N motor reducer
2B1601	SL60 24V 600N motor reducer
2B1900	SL60 pushing bar - stroke 180 mm
2B1901	SL60 pushing bar - stroke 230 mm
2B1902	SL60 pushing bar - stroke 350 mm
2B1903	SL60 pushing bar - stroke 550 mm
2B1904	SL60 pushing bar - stroke 750 mm
1B1580	Stroke restrictor kit
1B1813	Actuator supporting bracket
1S1603	Actuator supporting bracket for louvers
1S1604	Fitting bracket to the frame
3B1001	Spare parts
3B1002	Spare parts for louvers

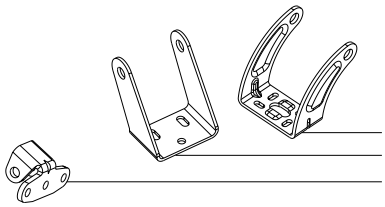

Special strokes:

Additional cost for special strokes
for order quantities below 12 pcs

Torget
+7 (911) 858-31-53
info@torget.ru

T50

Rack actuator
Thrust force 500N
Adjustable stroke
max. 750mm

Description for technical specifications

Linear electrical actuator, model T50, with self-aligning swivel movement, with stroke, complete with brackets and fitting accessories for top hung windows. Available at 230V 50Hz or at 24V DC. Max. applicable force 500N, max. stroke 750 mm +/- 20mm. Stroke adjustable about every 50mm by external adjusting selector. Preset for the mechanical connection of 2 or more push points by transmission rod. CE marked device.

Technical characteristics	T50 230 V	T50 24 V
Power supply voltage	230V ~ 50Hz	24V DC
Max. applicable load	500N	
Max. applicable load tandem version (1 master + 1 slave)	500N	
Max. applicable load tandem version (1 master + 1 master)	700N	
Max. applicable load tandem version (1 master + 2 slaves)*	450N	
Distance between 2 push points	max 2,4 m - min 1m.(1,5 m. between 2 masters)	
Available strokes (+/- 20mm) T50 mod. 320	150-200-250-320 mm	
Available strokes (+/- 20mm) T50 mod. 500	150-200-250-320-400-450-500 mm	
Available strokes (+/- 20mm) T50 mod. 750	180-280-370-470-560-650-750 mm	
Absorbed current at max. load	0,3 A	1,4 A
Idle translation speed	18mm/sec	10mm/sec
Duration of the idle stroke	(stroke/idle translation speed)	
Double electrical insulation	YES	-
Service type	S2 of 4 min	
Operating temperature	-5° + 55° C	
Protection degree of electric devices	IP55	
Parallel connection of more actuators	YES	
Adjustment of stroke end and strokes	encoder	
Dimensions	from 600 up to 1030x62x94 mm	

* On the same window frame can be mounted up to 6 drives linked by transmission rod. Ask our technical dept. for the placement of the pushing points and the calculation of the thrust force.

Applications: top hung windows, domes, skylights.

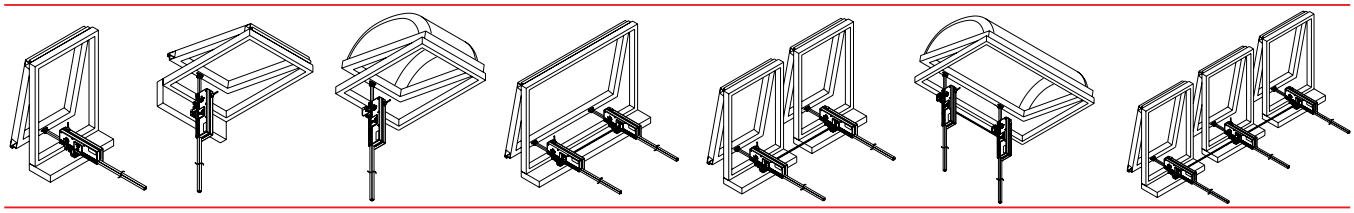

Torget
+7 (911) 858-31-53
info@torget.ru

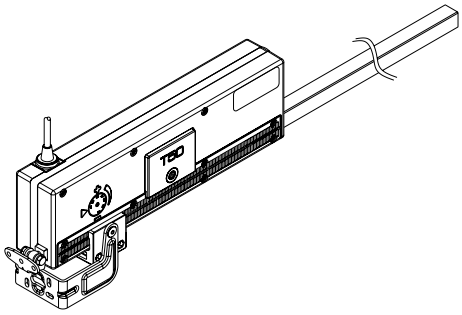

P/N	description

T50 Actuator kit (master)

3C20001	T50 Rack actuator 230V stroke 32 cm (adjustable)
3C20002	T50 Rack actuator 230V stroke 50 cm (adjustable)
3C20013	T50 Rack actuator 230V stroke 75 cm (adjustable)
3C20003	T50 Rack actuator 24V stroke 32 cm (adjustable)
3C20004	T50 Rack actuator 24V stroke 50 cm (adjustable)
3C20014	T50 Rack actuator 24V stroke 75 cm (adjustable)

T50 Rack assembly kit (slave)

3C2100	T50 Rack assembly stroke 32 cm (connection and fitting accessories included)
3C2101	T50 Rack assembly stroke 50 cm (connection and fitting accessories included)
3C2104	T50 Rack assembly stroke 75 cm (connection and fitting accessories included)

T50 connection rod

1C2505	T50 connection rod - Length 150 cm (interaxis max. 140cm)
1C2509	T50 connection rod - Length 300 cm (interaxis max. 240cm)

Description of the standard pattern for 2 push points

3C20001	T50 Rack actuator 230V stroke 32 cm (adjustable)
3C2100	T50 Rack assembly stroke 32 cm
1C2505	T50 Connection rod - Length 150 cm

Description of the standard pattern for 3 push points

3C20001	T50 Rack actuator 230V stroke 32 cm (adjustable)
3C2100	T50 Rack assembly stroke 32 cm
3C2100	T50 Rack assembly stroke 32 cm
1C2509	T50 Connection rod - Length 300 cm

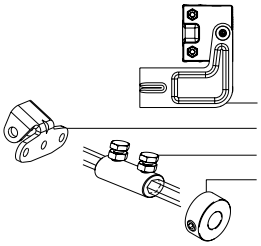

Accessories and spare parts

3C2010	Actuator support brackets
3C2001	Spare parts and sash bracket
1C2804	Junction ring between the connection rods for 3 push point
0A0483	Connection rod stop

Torget
+7 (911) 858-31-53
info@torget.ru

T80

Rack actuator
Thrust force 800N
Max. stroke 1000mm

Description for technical specifications

Electrical linear actuator Topp model, with tilting self-aligning movement, with rack, with brackets and accessories for top hung windows. Operation at 230V~50Hz or, as an alternative, at 24V DC. Max. traction and thrust force 800N. Pre-set for the mechanical or electronic connection of two or more push-points by transmission rod. Limit switch by Diodo hall. CE marked device, complying with the EN12101-2 standard for smoke and heat evacuation systems (only 24V version).

Technical characteristics	T80 230 V	T80 24 V
Power supply voltage	230V ~ 50Hz	24V
Max recommended load	800N	
Max recommended load 2 push points (1 master + 1 slave)	750N	
Max recommended load 2 push points (1 master + 1 master)	1200N	
Max recommended load 3 push points (1 master + 2 slaves)*	700N	
Distance between 2 push points	max 3 m - min 1m.	
Strokes	180 - 230 - 350 - 550 - 750 - 1000 mm	
Absorbed current	0,30 A	1,35 A
Idle translation speed	12 mm/s	
Double electrical insulation	YES	-
Service type	S2 of 4 min	
Operating temperature	-5° +55° C	
Protection degree of electric devices	IP55	
Parallel connection of two or more actuators	YES	
Connection and synchronisation of 1 T80 + racks on the same window	mechanical, by transmission rod	
End of stroke	electronic	
Dimensions	from 571,6 up to 1391,6x68,7x137,4 mm	

* On the same window frame can be mounted up to 5 drives linked by transmission rod. Ask our technical dept. for the placement of the pushing points and the calculation of the thrust force.

Applications: top hung windows, domes, louvers.

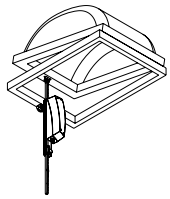

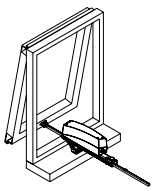

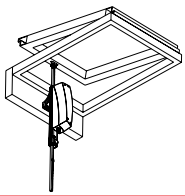

Torget
+7 (911) 858-31-53
info@torget.ru

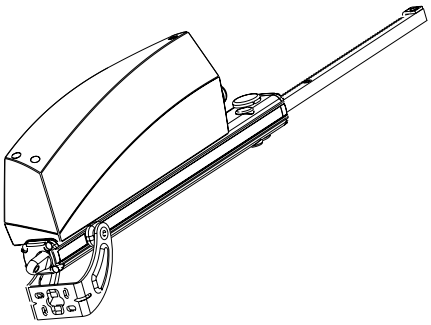

P/N	description

T80 standard 1 push point

3C1#000000726	T80 rack actuator 230V stroke 18 cm
3C1#000000727	T80 rack actuator 230V stroke 23 cm
3C1#000000728	T80 rack actuator 230V stroke 35 cm
3C1#000000729	T80 rack actuator 230V stroke 55 cm
3C1#000000730	T80 rack actuator 230V stroke 75 cm
3C1#000000731	T80 rack actuator 230V stroke 100 cm
3C1#000000732	T80 rack actuator 24V stroke 18 cm
3C1#000000733	T80 rack actuator 24V stroke 23 cm
3C1#000000734	T80 rack actuator 24V stroke 35 cm
3C1#000000735	T80 rack actuator 24V stroke 55 cm
3C1#000000736	T80 rack actuator 24V stroke 75 cm
3C1#000000737	T80 rack actuator 24V stroke 100 cm

T80 standard 2 push points (interax between the 2 points: 2 mt)

3C1#000001180	T80 rack actuator 230V tandem stroke 18 cm
3C1#000001181	T80 rack actuator 230V tandem stroke 23 cm
3C1#000001182	T80 rack actuator 230V tandem stroke 35 cm
3C1#000001183	T80 rack actuator 230V tandem stroke 55 cm
3C1#000001184	T80 rack actuator 230V tandem stroke 75 cm
3C1#000001185	T80 rack actuator 230V tandem stroke 100 cm
3C1#000001186	T80 rack actuator 24V tandem stroke 18 cm
3C1#000001187	T80 rack actuator 24V tandem stroke 23 cm
3C1#000001188	T80 rack actuator 24V tandem stroke 35 cm
3C1#000001189	T80 rack actuator 24V tandem stroke 55 cm
3C1#000001190	T80 rack actuator 24V tandem stroke 75 cm
3C1#000001191	T80 rack actuator 24V tandem stroke 100 cm

T80 standard 1 push point

3C1#000000728	T80 rack actuator 230V stroke 35 cm Brackets set for 1 single push point Spare parts for 1 single push point

T80 standard 2 push points

3C1#000001182	T80 rack actuator 230V stroke 35 cm T80 rack assembly stroke 35cm Transmission rod L=1872mm (interax 2,0 mt) Brackets set for 2 push points Connection accessories for 2 push points Spare parts for 2 push points

Accessories and spare parts

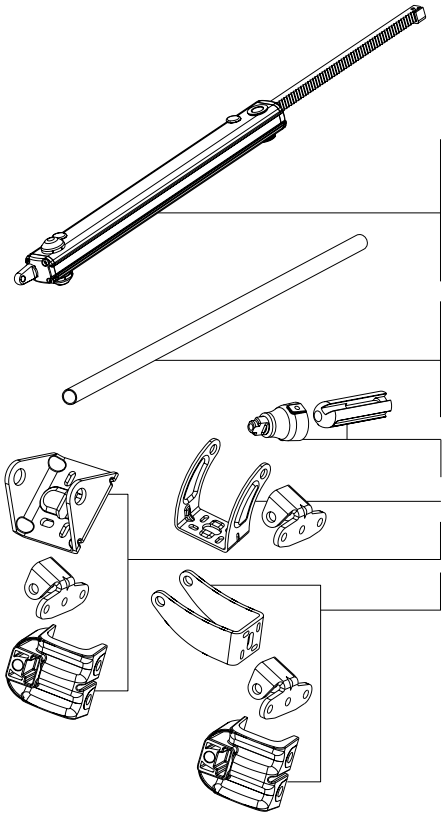

3C1300	T80 rack assembly stroke 18 cm
3C1301	T80 rack assembly stroke 23 cm
3C1302	T80 rack assembly stroke 35 cm
3C1303	T80 rack assembly stroke 55 cm
3C1304	T80 rack assembly stroke 75 cm
3C1305	T80 rack assembly stroke 100 cm
1C1040	Transmission rod L=872mm (interax 1,0 mt)
1C1041	Transmission rod L=1372mm (interax 1,5 mt)
1C1042	Transmission rod L=1872mm (interax 2,0 mt)
1C1043	Transmission rod L=2372mm (interax 2,5 mt)
1C1044	Transmission rod L=2872mm (interax 3,0 mt)
3C1010	Connection accessories for 2 push points
3C1011	Connection accessories for 3 push points
3C1200	Brackets set for 1 push point
3C1201	Brackets set for 2 push points - vertical mounting
3C1202	Brackets set for 3 push points - vertical mounting
3C1203	Brackets set for 3 push points - frontal mounting
3C1204	Brackets set for 3 push points - frontal mounting
3C1001	Spare parts for 1 push point
3C1210	Spare parts for 2 push points
3C1211	Spare parts for 3 push points

Torget
+7 (911) 858-31-53
info@torget.ru

TF23R_TF33R_TF24R_TF44R_RR

Control and power units for actuators at 230V and 24V

Description for technical specifications

TF33R - Control and feeding unit with 2 exits at 24V and 1 exit at 230V, max. 1,5A each. With receiver for the remote control, either at 433,92 MHz or infra-red. Input for one RW wind sensor with adjustable speed threshold via trimmer. Possibility to operate two RDC 12V rain sensors simultaneously. A blue LED indicates the state of the control unit and the remote control. The control unit's functions (exclusion of the rain sensor, manual operation, thermostat connection, etc.) can be set out via dip-switch. CE marked device.

TF23R_TF24R_TF44R_RR - The TF23R, TF24R, TF44R and RR control units feed and control TOPP actuators at 24V or 230V. Built-in radio receiver at 433,92 MHz. Pre-set for RW wind sensor and RDC 12V rain sensor. CE marked device.

Technical characteristics	TF23R	TF33R	TF24R	TF44R	RR
Power supply voltage	230V ~ 50Hz				
Output voltage	24V	230V - 24V	24V	230V	230V
Max power consumption	32W		62W	300W	300W
Max absorbed current	0,5A		1,35A	1,3A	1,3A
Service type	S1 - continuous				related to the number of actuators
Pre-set for	wind and rain sensors, manual switches				rain sensor or manual switch
Operating temperature	-5° +50° C				
Overall dimensions	150x80x55 mm 150x80x28 mm		160x120x75 mm		87x53x32 mm
C20 that can be connected	3		4	16	6
C20 Tandem that can be connected	-		2	8	3
C30 that can be connected	-		4	16	4
C40 that can be connected	-		4	20	5
ACK4 that can be connected	-		-	16	4
C130 that can be connected	3		4	16	6
C240 that can be connected	-		2	8	3
SL60 that can be connected	-		4	16	4
T50 that can be connected	-		1	16	4
T80 that can be connected	-		1	8	3

Torget
+7 (911) 858-31-53
info@torget.ru

P/N	description

Control and power units for actuators at 230V and 24V

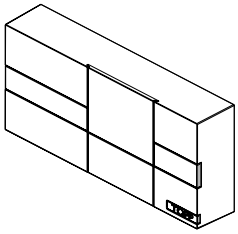

8C0070	TF23R Control and feeding unit, 3 exits at 24V (C20), with 433 MHz remote control receiver and infra-red LED. Box for wall fixing with sliding opening to programm remote control and emergency closure. Can be used with TR8 infra-red/radio remote control.
8C0071	TF33R Control and feeding unit, 2 exits at 24V (C20) and 1 exit at 230V, with 433 MHz remote control receiver and infra-red LED. Box for wall fixing with sliding opening to programm remote control and emergency closure. Can be used with TR8 infra-red/radio remote control.
8C0072	TF33R Control and feeding unit, 2 exits at 24V (C20) and 1 exit at 24V, with 433 MHz remote control receiver and infra-red LED. Box for wall fixing with sliding opening to programm remote control and emergency closure. Can be used with TR8 infra-red/radio remote control.

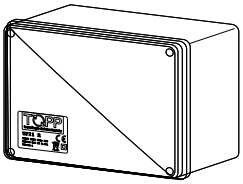

8C0054	TF24R Control and power unit 24V (4 exits) with 433MHz receiver. Can be used with TR8 infra-red/radio remote control.
8C0066	TF44R Control and power unit 230V (4 exits) with 433MHz receiver. Can be used with TR8 infra-red/radio remote control.

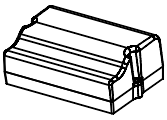

8C0120	RR Control and feeding unit 230V, max. 1,3A (1 exit) with 433 MHz on-board receiver. Can be used with TR8 infra-red/radio remote control.
8D0008	AL/TF Feeder unit 230/24V (for TF24R) Batteries not included
8K0001	Battery set (2x12V 6,5Ah) for AL/TF feeder unit
8D0004	AL2/SW electronic feeder board for 24V actuators max 1,6A (max. 2 C20)
8D0014	Cabur XCSP240C feeding unit - 24V electronic board feeding unit for the connection of actuators, max. 10A
8C0104	AC8 Control and Feeding Unit at 24V - max. 16A
8K0002	Battery set for AC8 (2x12V 10Ah)
8C0091	MEM/AL Expanding Module - max. 16A
8K0001	Battery set for MEM/AL (2x12V 6,5Ah)
8C0090	MEM module for local operation

Torget
+7 (911) 858-31-53
info@torget.ru

RW_RD_RF911_RF913_TR8

Detectors

RW Wind sensor

The wind sensor, connected to TOPP control units, closes the windows when the wind speed exceeds a preset value. Contained in weatherproof plastic housing, with rotating blade system sensing wind speed.

RDC/12 Rain sensor

The RDC/12 rain sensor, like the wind sensor, must be placed outside, exposed to rainfalls. It can be connected to the TOPP control units TF23R, TF33R, TF24R, TF44R and RR to operate the windows automatic closure when the sensor is wet.

RF911 Smoke detector

The RF911 analogical smoke detector is a device for indoor smoke detection. Certified to UNI EN 54. Secures high reliability and is protected against false alarms.

RF913 Smoke detector

The RF913 rise thermal detector is realised with a static element set at 60° and is designed to provide fast response to rapid increases in temperature. Certified to UNI EN 54.

TR8 Radio/IR remote control

Remote control available as radio at 433,92 Mhz and as infra-red, with 8 silicon rubber buttons, blue backlit, battery-operated by two 3V CR2032 batteries. Device supplied with holder for wall fixing.

Torget
+7 (911) 858-31-53
info@torget.ru

P/N	description
Detectors	
8E0030	RW wind sensor
8E0054	RDC/12 12V rain sensor, with adhesive tape for roof fixing (for TF 23R/TF33R/TF24R/TF44R/RR)
0B0020	RDC/12 special adjustable bracket
8E0041	RPR2 230V Heated rain sensor (for AC8)
8E0010	RF911 optical smoke detector
8E0020	RF913 temperature detector

TR8 Radio/IR remote control

8E0314	TR8 Radio/IR remote control (with holder for wall fixing)

Torget
+7 (911) 858-31-53
info@torget.ru

TECHNICAL REMARKS

How to choose the right actuator for your window

The selection of the right window actuator is very important and should allow to get maximum results.
The following technical details are to guide you in your final choice of actuator and should be considered before any decision is made.
There are mainly two types of actuators: linear / rack actuators (rigid rod) and chain actuators (flexible chain).
The linear / rack actuator can offer great performance and push high loads, but has a requirement both physical and aesthetic which is not always acceptable. The actuator body has to move in a pivoting motion from its brackets, therefore it is necessary to verify that there are no abstacles to its rotational movement.
If a rod actuator is unsuitable, a chain actuator must be used, subject to weight restrictions.

The chain actuator operates generally at lower thrust power and requires a limited space, as well as being aesthetically pleasing.
For windows having a width larger than 1500-2000 mm, a single actuator is not enough.
With this size the window and the safety of the installation require the application of more than one actuator, usually linked to a synchronization device.

FORMULAS TO CALCULATE TRACTION AND THRUST FORCE (kg)

Horizontal windows

F = Required force for opening and closing (kg)
P = Window sash weight (kg)

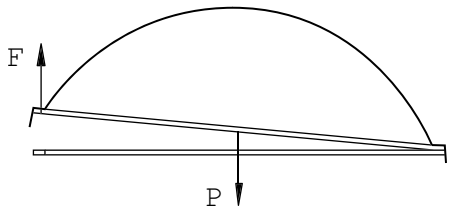

$$F = 0{,}54.P$$

Top hug windows (a) or bottom hung windows (b)

F = Required force for opening and closing (kg)
P = Window sash weight (kg)
C = Window opening stroke (mm)
H = Window height (mm)

(a)

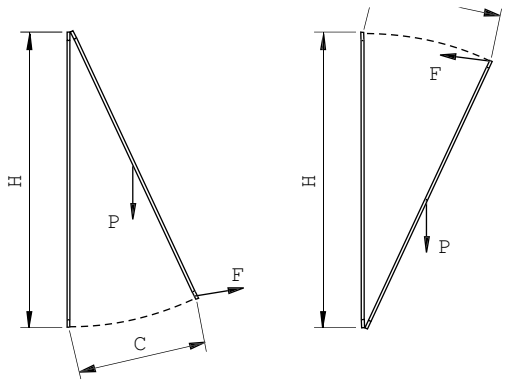

(b)

$$F = (0{,}54.P)\ .\ (C/H)$$

Torget
+7 (911) 858-31-53
info@torget.ru

Notes

Torget
+7 (911) 858-31-53
info@torget.ru

TOPP spa . Società a socio unico soggetta a direzione e coordinamento di 2 Plus 3 Holding S.p.a.
via Galvani 59 . 36066 Sandrigo (VI) . tel. +39 0444 656700 . fax +39 0444 656701 . www.topp.it | info@topp.it